YuDu ShengDa Electronic Manufacture Co., Ltd

10/100/1000 BASE-T SINGLE PORT SURFACE MOUNT MAGNETICS

Feature

- **Meets IEEE802.3&ANSI X 3.263 Standards**
- **RoHS Compliant**
- **10/100/1000 Base-T Surface Monut Type Open Header**
- **Operating Temperature Range: 0°C to +70°C**

Electrical Specifications@25℃							
Part Number	OCL(uH Min) @100KHz/V with 8mA DC Bise	L.L (uH Max)	Cw/w (pF Max)	DCR (Ω Max)	HI-POT (Vrms)	T/R (±5%)	
						TX	RX
HG24207N	350	0.5	25	1.2	1500	1CT:1CT	1CT:1CT

Continue						
Part Number	Insertion Loss (dBMax)	Return Loss(dB Min)			Cross talk (dB Min)	DCMR (dB Min)
	0.3-100MHz	0.5-30MHz	60MHz	60-100MHz	0.3-100MHz	0.3-100MHz
HG24207N	-1.1	-18	-13	-11	-35	-30

MECHANICAL

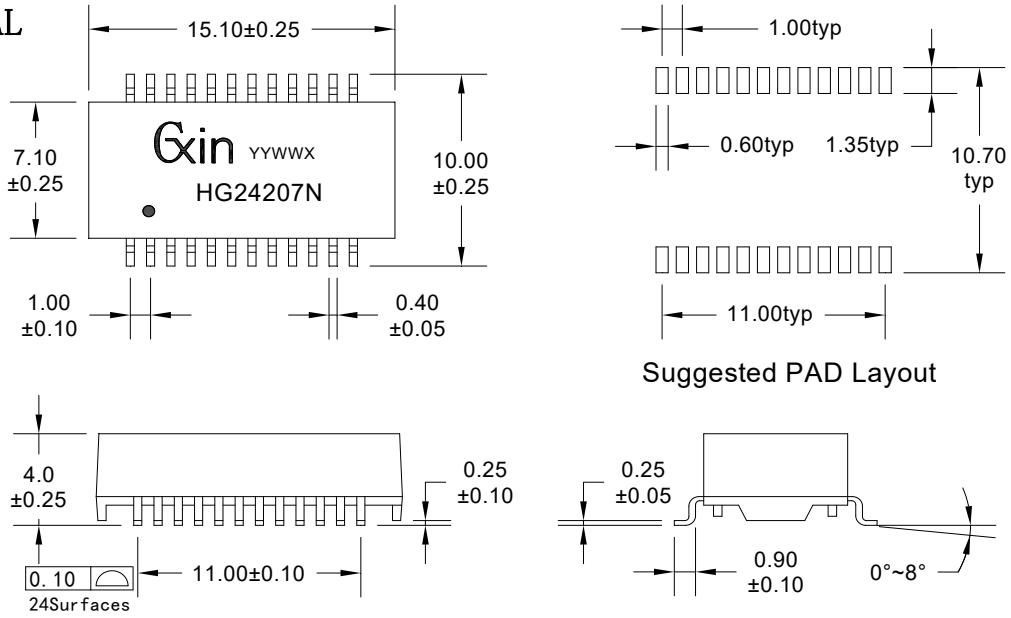
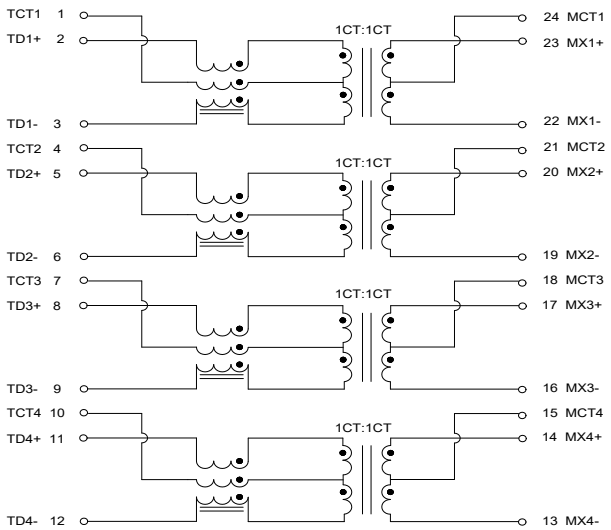
SCHEMATICS